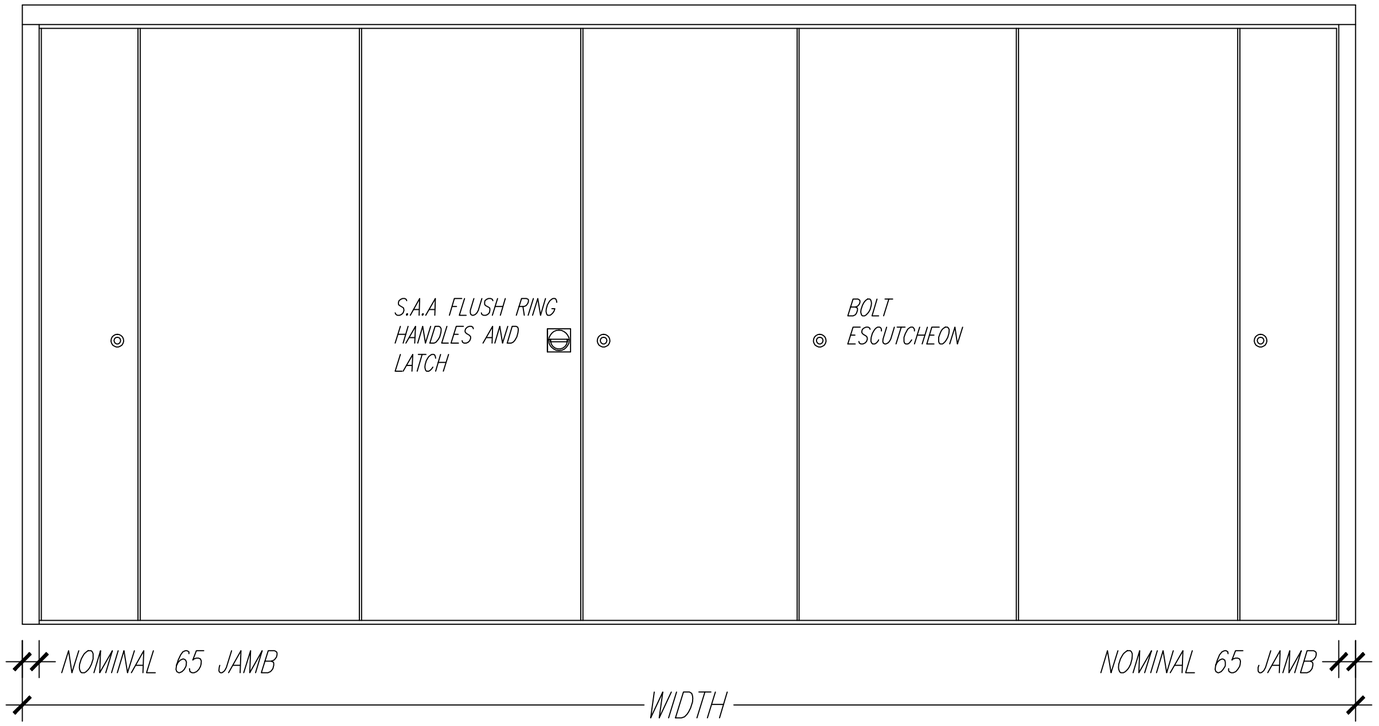

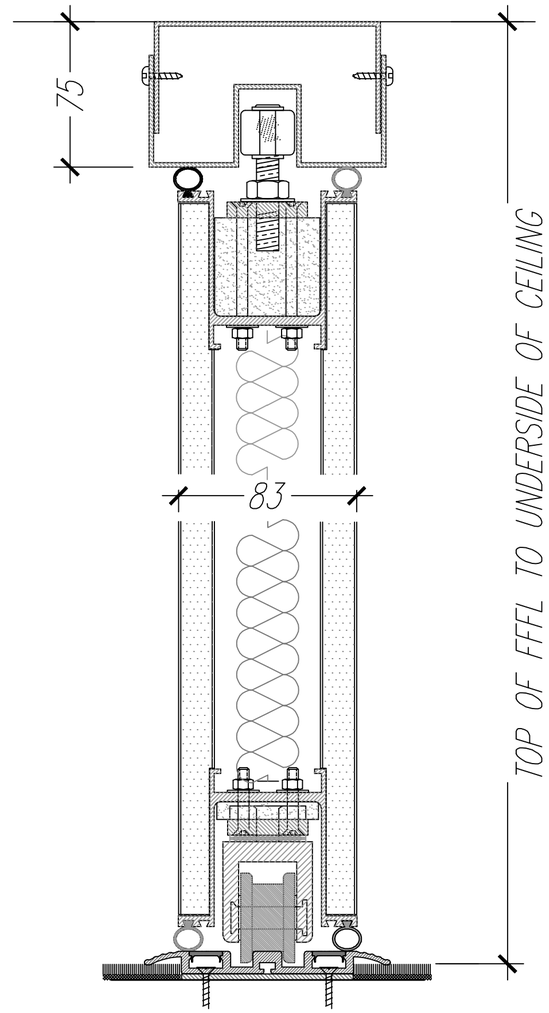

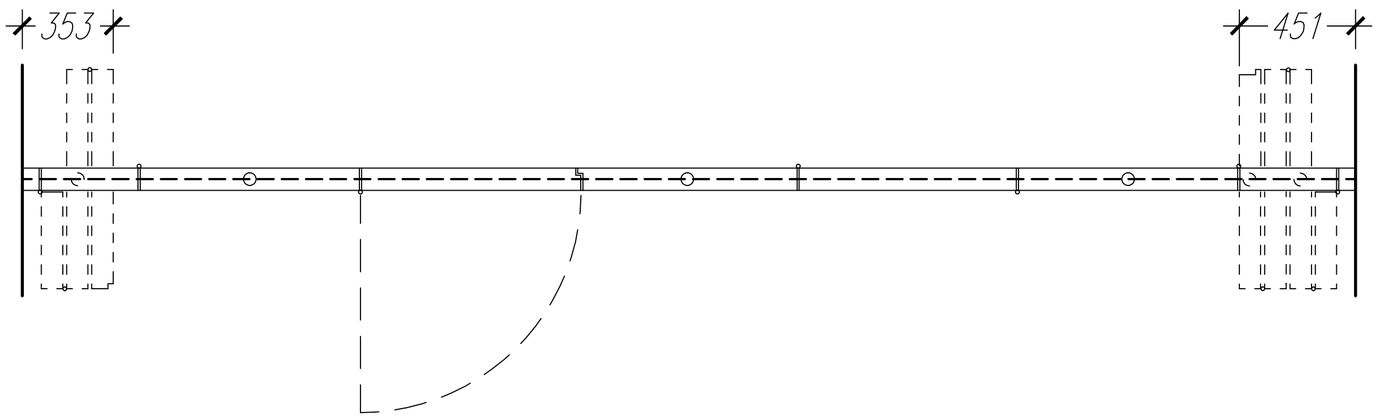

No. SETS:	TYPE: 3½ + 2½ Centrefold	dB:		Client:
FINISH:				Site:
PROFILES:				
SUSPENSION: BOTTOM ROLLING	Scale: n.t.s	Date:		Job No: / Drg No: